LED CL SERIES

CL - 28 Watts

Key Features & Benefits:

- Wet Location Approved
- Omnidirectional
- Rated for Fully Enclosed Fixtures

Project: Date:

Catalog #:

Notes:

5 YEAR WARRANTY

c UL us LISTED

Technical Specifications:

Power: 28 Watts
Lumen Output: Up to 3,555 Lumens
Efficacy (lm/W): Up to 127 Lumens per Watt
Kelvin: 3000K, 4000K, 5000K
CRI: >80
Input Voltage: 120-277 VAC
Life Span: 50,000 Hours
Beam Angle: 300°
Dimensions(ØxH): 3.66" x 7.82"
Weight(lbs): 1.3 lbs
Base Type: E39/E26
Operating Temperature: -4 ~ 149°F (-20 ~ 65°C)
Power Factor: >0.95
Total Harmonic Distortion (THD): < 20%

No Fans

No Noise

No Bugs

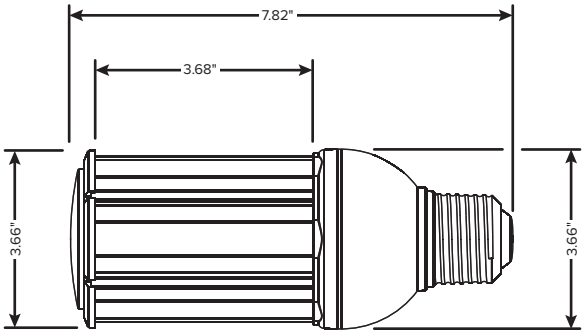

ITEM#	WATTS	LUMEN OUTPUT	EFFICACY (lm/W)	KELVIN
ESL-CL-28W-230	28W	3,210	115	3000K
ESL-CL-28W-240	28W	3,378	121	4000K
ESL-CL-28W-250	28W	3,555	127	5000K

*2700K and 5700K available upon request

Ordering Guide:

Example Part Number: ESL-CL-28W-230S

ESL	-	CL	-	28W	-	2		
ESL		TYPE		WATTS		GENERATION	KELVIN	BASE
		CL		28W (28 Watts)		2 (2nd Generation)	30 (3000K) 40 (4000K) 50 (5000K)	S (E26) M (E39)

Additional Options:

OPTIONS
ESL-SP-277 (Surge Protector up to 277 VAC)

Copyright © 2018 ESL Vision, LLC. All rights reserved. Rev: 03/19/2018

888.493.5559 info@eslvision.com www.eslvision.com